Max HPL & Aptico

TECHNIQUE

General Processing
Guidelines

Contents

Quality	**4**
Material properties	**6**
Responsible use of resources	**8**
Transport and handling	**9**
Processing recommendations	**10**
Cleaning	**18**
Max HPL panel with Aptico surface	**20**

Note
For the latest version of this brochure please visit www.fundermax.com

The diagrams within this brochure are purely for reference and are not true to scale. This issue replaces and supersedes all previous copies of Fundermax's Interior HPL Aptico Technical Brochures.

Fundermax

Whether it's furniture, facades, or interior design: where ideas and materials meet, you'll find Fundermax. As a global market leader in the field of high pressure laminates and a manufacturer of high-quality wood-based materials, we are proud to look back on a history spanning more than 130 years. Our continued success is based on the highest quality standards, innovative and varied design, as well as carefully managed production processes. Made in Austria — with great love for natural ressources, creations, and imagination.

- Modern production facilities in Austria, Norway and the Netherlands
- Approx. 1,500 employees
- Part of Constantia Industries AG
- Integrated management system certified according to ISO standards*: 9001 Quality, 14001 Environment, 50001 Energy efficiency, 45001 Occupational health and Safety
- Wood and paper sourced from FSC®- and PEFC-certified sources**
- Certified according to the SURE-EU system within the certified scope***

* Certified according to ISO 9001:2025, ISO 14001:2015, ISO 50001:2018 and ISO 45001:2018 for the St. Veit/Glan site, including the Wiener Neudorf and Neudörfl/ Leitha locations, by SystemCERT Zertifizierungsges.m.b.H.

** FSC® [C101966], PEFC [06-35-246]

*** SURE-EU Certificate No.: SURE-EU/DE-011/Z03400097 and SURE-EU/DE-011/Z03400106

1 Quality

Max Decorative Laminates – HPL

Max HPL panels are duromer high-pressure laminates in accordance with EN 438-3, type HGS and are ideal for decorative and high-traffic areas of application (e.g. furniture, interior design, etc.). They are perfect for such applications as they are highly resistant to abrasions, impacts, scratches and heat.

Formats:	2,140 x 1,060 mm*, 2,800 x 1,300 mm, 4,100 x 1,300 mm
Thickness:	1.0 mm

Surface Aptico

Leaves impressions, not fingerprints: The patented technology not only ensures an attractive matte finish, but the anti-fingerprint effect also ensures that it stays beautiful for a long time. In addition to being pleasant to the touch, the Aptico surface is easy to process and particularly durable.

*only available with brown core

Max HPL panels can also be used for horizontal applicatios. In everyday use, mechanical stresses arising from the movement of objects (plates, glasses, cups, etc.) can produce visibly shiny patches on highly textured or deep matt surface. The effect, which is especially pronounced in combination with dark decors, reflects the ageing typical of the material rather than a deviation from the norm.

Advantages

- Anti-fingerprint
- Low light reflection
- Matt structure with a warm feel
- Resistant to scratches and abrasion
- Easy to process
- Easy to clean
- Resistant to solvents and common household cleaners

2 Material properties

Characteristics:

- anti-fingerprint (Aptico)
- scratch-resistant
- solvent-resistant
- food-grade
- easy to clean
- hygienic
- suitable for all interior applications
- decorative
- tough
- abrasion proof
- frost and heat resistant
- prolonged temperature resistant HPL -80°C to +80°C
- easy to process
- durable
- impact resistant
- resistant to chemicals

Physical properties

Properties	Test method	Assessment	Standard value[1]	Typical value[2]	
				Max HPL (HGS/HGP)	Aptico Uni (HGS)[3]
Length tolerance	EN 438-2:2016. 6	mm	+10 / -0	+10 / -0	+10 / -0
Thickness tolerance (t = thickness) black core	EN 438-2: 2016. 5	mm	0.5 ≤ t ≤ 1.0: max ± 0.10 1.0 < t < 2.0: max ± 0.15	0.5 ≤ t ≤ 1.0: max ± 0.10 1.0 < t < 2.0: max ± 0.15	0.5 ≤ t ≤ 1.0: max ± 0.10 1.0 < t < 2.0: max ± 0.15
Thickness tolerance (t = thickness) color core	EN 438-2: 2016. 5	mm	0.5 ≤ t ≤ 1.0: max ± 0.15 1.0 < t < 2.0: max ± 0.18	0.5 ≤ t ≤ 1.0: max ± 0.15 1.0 < t < 2.0: max ± 0.18	0.5 ≤ t ≤ 1.0: max ± 0.15 1.0 < t < 2.0: max ± 0.18
Raw density	EN ISO 1183-1	g/cm²	≥ 1.35	≥ 1.47	≥ 1.45
Mechanical properties					
Resistance against stress abrasion	EN 438-2:2016. 10	Revolutions	≥ 150 (HGS/HGP) ≥ 350 (HDS)	≥ 185	≥ 450
Impact stress with small diameter ball	EN 438-2:2016. 20	N	≥ 20 (HGS/HGP) ≥ 25 (HDS)	≥ 25	≥ 30
Resistance to cracking under stress	EN 438-2:2016. 23	Rating	4	5	5
Resistance to scratching	EN 438-2:2016. 25	Rating	≥ Grade 3 (HGS/HGP) ≥ Grade 4 (HDS)	≥ 4-5	≥ 4-5
Formability	EN 438.2:2016. 32	mm	HGP: ≤ 10x Thickness	≤ 10x Thickness	-
Thermal properties					
Resistance to water vapour	EN 438-2:2016. 14	Rating		4	4
Resistance to dry heat	EN 438-2:2016. 16	Rating	Gloss: ≥ 3 Other Surfaces: ≥ 4	4	4
Dimensional stability at elevated temperature	EN 438-2:2016. 17	%	length: ≤ 0.55 (HGS/HGP) ≤ 0.45 (HDS) width: ≤ 1.05 (HGS/HGP) ≤ 0.90 (HDS)	length: 0.23 width: 0.60	length: 0.20 width: 0.43
Resistance to moist heat	EN 438-2:2016. 18	Rating	Gloss: ≥ 3 Other Surfaces: ≥ 4	4-5	4-5
Resistance to blistering	EN 438-2:2016. 33	s	HGP: ≥ 15	20	-
Optical properties					
Resistance to staining	EN 438-2:2016. 26	Rating	Group 1/2: 5 Group 3: ≥ 4	5	5
Light fastness	EN 438-2:2016. 27	Grey Scale	4-5	4-5	4-5
Gloss level at measuring angle of 85°	EN ISO 2813	GE	–[4]	–[4]	7

1) According to EN 438-6
2) Typical values result from internal quality tests. Typical values are only shown as examples and can't be used for any liability on the part of Fundermax (no promised guaranteed values). Fundermax only guarantees compliance with the standard values.
3) Only available in Plain Colours
The surface Aptico corresponds to the specifications of the EN-438 for horizontal use, type HGS. Due to the special surface structure, it can be, however, that the surface especially in combination with dark decors is not suitable for all horizontal uses. If necessary, the corresponding décor must be subjected to a suitable suitability test by the user prior to the potential use.
4) Dependent on the surface structure

Type HGS (standard quality)
OFI CERT HPL EN 438 HGS
The key characteristic of this quality are highly durable surfaces which are scratch and impact resistant. Due to their thickness, these surfaces are particularly resistant to boiling water, numerous household chemicals, as well as dry and damp heat. The reverse face of Max HPL panels is designed to ensure flawless adhesion to substrates (for example chipboard, plywood, etc).

Type HGP (postformable quality)
OFI CERT HPL EN 438 HGP
Type S (HGS), but can be used in pre-determined conditions such as temperature, heating times, etc. (postforming process).

During a cold forming process, cracking may occur with HPL laminate boards, irregardless of the size of the radius.

OFI CERT confirms compliance with EN 438.

3 Responsible use of resources

HPL Sheets – Efficient use of resources

Fundermax specialises in the processing of raw materials from renewable sources – and has done so for over 130 years. Our approach includes closed-loop production, the reuse of manufacturing waste, and energy recovery. Fundermax supplies district heating to around 10,000 households.

Certifications
The production facilities and processes are aligned with internationally recognized standards (ISO 9001 Quality, ISO 14001 Environment, ISO 50001 Energy Efficiency, ISO 45001 Occupational Health and Safety).* Fundermax also adheres to current standards such as FSC® and PEFC** when sourcing raw materials and intermediate products (Details: www.fundermax.com

Production
Max HPL panels are made of natural fiber panels (about 65% of the total weight) and are made mainly of wood which is refined into "kraft papers." The latter is a byproduct of sawn timber production or from sawmills. The raw materials come from suppliers certified according to the FSC® and PEFC standards**, which guarantee sustainable forest management.

The kraft papers are impregnated with synthetic resins in impregnation plants, dried, and pressed into panels under high pressure and at high temperatures. They contain no organic halogen compounds, asbestos, wood preservatives (fungicides, pesticides, etc.), sulfur, mercury, or cadmium.

The exhaust air extracted during the drying process is treated using regenerative thermal oxidation. The heat generated is recycled back into the process, saving approximately 10,000 metric tons of CO2 annually. This exhaust air treatment has also been awarded the "klimaaktiv" certification by the Austria Energy Agency and the Federal Ministry of the Environment.

Long lasting & maintenance free
Extensive tests have demonstrated the exceptional durability of Max HPL panels. The manufacturing process ensures a highly resistant surface, producing panels which don't require any maintenance and offer a long service life. The surface doesn't wear easily and, if necessary, can be cleaned with standard cleaning agents. Its durable surface makes it ideal for more demanding applications such as: furniture fronts and various building furnishings.

Waste disposal
Chips and shavings produced by processing (cutting and milling) are not hazardous to human health. This also means that waste can even be disposed of thermally without the emission of environmental toxins such as hydrochloric acid, organic chlorine compounds or dioxins, assuming modern heating systems. At appropriately high temperatures, and assuming both sufficiently long retention of the combustion gas in the combustion space and a sufficient oxygen supply, Max HPL decomposes into carbon dioxide, nitrogen, water and ash. The energy emitted via this process can be put to use. Disposal in properly managed commercial waste disposal sites is unproblematic. As a matter of principle, country-specific laws and regulations with regard to disposal must be adhered to.

klimaaktiv

* Certified according to ISO 9001:2025, ISO 14001:2015, ISO 50001:2018 and ISO 45001:2018 for the St. Veit/Glan site, including the Wiener Neudorf and Neudörfl/Leitha locations, by SystemCERT Zertifizierungsges.m.b.H.

** FSC® [C101966], PEFC [06-35-246]

4 Transport and handling

Guidelines for handling Max HPL panels

Transport and handling
Handle Max HPL panels with care in order not to damage the edges and surfaces of the high-quality material. In spite of the excellent surface hardness and the installation protection film, the stack weight of Max HPL panels is a possible cause of damage. Therefore, any form of dirt or dust between the panels must definitely be avoided.

Max HPL panels must be secured against slippage during transport. When loading or unloading, the panels must be lifted. Do not push or pull them over the edge (see Fig. 4 01)

Maybe there is a stronger adhesion of the foils on the surface because of the storage. Therefore there might be a higher effort to remove the foil. That does not have any effect to the quality of the product and does not result into a complaint. The transport protection film must not be exposed to heat or direct sunshine.

Storage and air conditioning
Max HPL should always be left in the original packaging. The panels should be stacked horizontally on a flat, stable and padded raised surface. If this is not possible, the panels can be temporarily stored as shown in Fig. 4 03. The panels must lie completely flat. After removing the panels, the original packaging should be closed again.

Cover plates must always be left on the stack (see Fig. 4 02). The top cover should be weighted down. The same applies, in principle, for cut-panel stacks.

Incorrect storage can lead to permanent deformation of the panels.

Max HPL panels should to be stored in closed rooms under normal climatic conditions, temperature about 15°C – 25°C and relative humidity at about 40% – 60%. Climate differences on the two surfaces of a panel are to be avoided.

With pre-installed fastening elements, therefore, care is to be taken that the climatic effect is uniform on all sides. Use intermediate layers of wood or plastic.

Hint for final cleaning
Please ensure that foreign substances (e.g. drilling and machine oils, greases, adhesive residues, etc.) that soil the surface of the Max HPL panels during storage, installation and use are removed immediately without leaving any residue. No responsibility will be accepted for any complaints regarding color, gloss and surface of the panels should these recommendations fail to be observed. For details on how to properly clean Max HPL panels, see page 18.

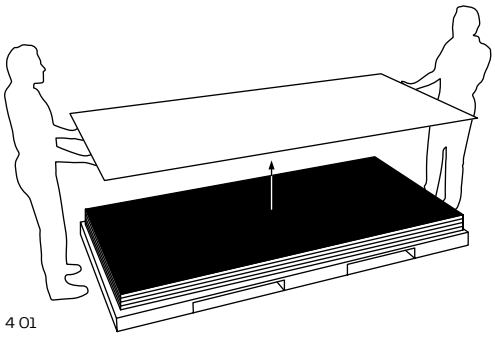
4 01

4 02

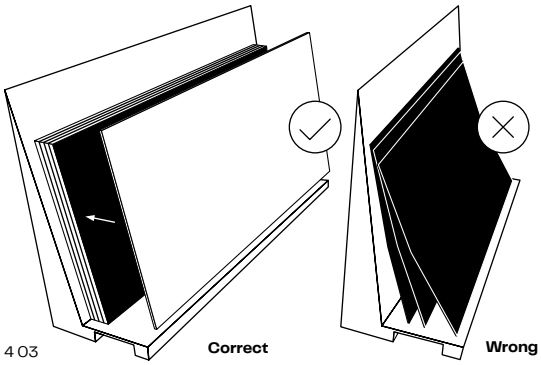

4 03

5 Processing recommendations

Machining of Max HPL Panels and Aptico

General
The surface of Max HPL is made up of high-quality melamine resins and is therefore highly resistant. The processing characteristics of Max HPL panels are similar to those of hardwood. Please refer to the instructions for the optimal processing of Aptico. Carbide cutting tools have proved their worth and are indispensable for cutting Max HPL boards. For a prolonged tool life, diamond tips should also be used.

Sharp blades, smooth technique and well maintained tools are required for flawless results. Breaks, chipping (particularly chipping of the decorative face) are the result of incorrect machining or unsuitable tools. Work surfaces should be smooth and wherever possible joint free, to avoid the build-up of sawdust contamination which could damage the surface of the HPL. This also applies to work tables and the guides of hand-held tools.

The processing of non-glued panels should be carried out on an even, firm surface. Any vibrations or juddering must be avoided, as resulting scores can lead to cracks during stress/expansion (e.g. tension within the panel during temperature or moisture fluctuations); so-called 'tension' or 'notched tears'.

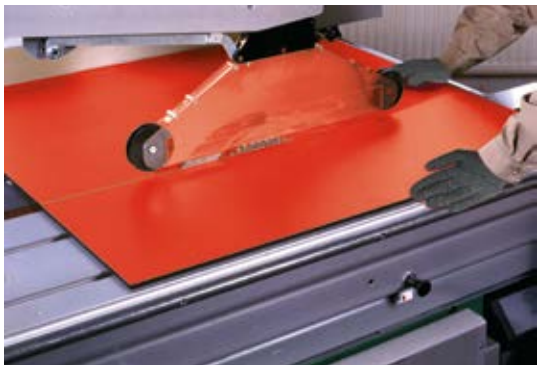

4 01

Safety precautions
This is a list of the recommended personal protective equipment (PPE) which should be used. The normal protective equipment (workwear, safety shoes, hairnet…) required for the respective activity should be worn.

Gloves
Non-bevelled cut edges are naturally sharp posing a risk of injury. It is advisable to use gloves of protection category II with a minimum cut resistance of 2 when handling freshly cut Max HPL panels.

EN 388

4 1 2 1

Mechanical risks
The higher the number, the better the test result

Test Criteria	Evaluation possibilities
Abrasion resistance	0 – 4
Cutting strength	0 – 5
Tear strength	0 – 4
Puncture resistance	0 – 4

Saftey goggles
As with the manufacturing of any wood materials, tightly-sealed eye protectors must be worn when working with Max HPL.

Dust protection
As with the processing of all wood materials, when working with Max HPL, dust can be created. Please provide adequate respiratory protection (disposable fine dust mask).

Ear protection
As with all wood materials, during the machining of Max HPL, sound levels can rise above 80dB (A). Please always ensure operators have adequate hearing protection.

General processing guidelines

When working with Max HPL panels, the ratio between the number of teeth (z), the cutting speed (vc) and the feed rate (vf) must be observed.

	v_c m/s	f_z mm
Saw	40,0–60,0	0,02–0,1
Mill	30,0–50,0	0,3–0,5
Drill	0,5–2,0	0,1–0,6

Calculation of cutting speed

$$v_c = D \cdot \pi \cdot n/60$$

v_c – cutting speed
D – tool diameter [m]
n – tool rotational speed [min–1]

Calculation of feed speed

$$v_f = f_z \cdot n \cdot z/1000$$

v_f – feed rate [m/min]
f_z – tooth feed
n – tool rotational speed [min–1]
z – number of teeth

Cutting of Max HPL panels
For straight cuts using a circular saw, a guide bar must be used. It is recommended to use hard metal tipped circular saw blades. Panels should be cut from underneath, in the direction of the teeth, firstly by using a scoring cut followed by the main blade cutting operation:

- WZ/FA For coarse cuts
- FZ/TR For clean cuts on Max HPL panels and panels glued on both sides

When cutting with a circular table saw, a fine-cut saw etc. the following instructions are essential for good results:

- visible side up;
- very narrow saw guide;
- firm alignment of the Max HPL panels on the work bench with the cutting blade;
- correct blade protrusion.

Depending on the blade protrusion, the entry and exit angle, the quality of the cutting edge will change. If the upper cut edge isn't neat, the blade must be adjusted upwards. If the cut edge of the underside is the same, the blade should be adjusted down-wards. The most favourable height setting must be determined.

Max HPL panels can also be cut in a stack. To achieve the best cutting results on both sides, choose a saw with a scoring unit.

Note: Split edges are to be expected when processing with hand held jigsaws!

Circular saw blades
The following tooth forms should be used in the processing of Max HPL or glued Max HPL panels.

WZ/FA (variable tooth with bevel)
An alternative to FZ / TR tooth form

FZ/TR (flat tooth/trapezoid tooth)
Tooth form for processing Max HPL panels.

- WZ / FA for coarse cuts
- FZ / TR produces a clean cut edge with a prolonged tool life.
The slightly higher cutting pressure must be observed.

The quality of the cutting edge depends on the set up of the saw, the saw blade and the machining parameters:
Due to the variety of the equipment and tasks, we recommend that you discuss specific requirements with your tool supplier.

For the processing of Aptico, we recommend the same tooth forms – albeit with an increased number of teeth – and always newly refurbished blades in order to achieve an optimum processing quality.

5 02 5 03

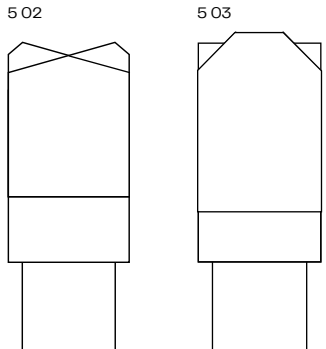

5 01 Panel dividing saw
5 02 WZ/FA
5 03 FZ/TR

Cut edge finishing and profiling

Edge processing by hand
Files are a suitable tool for finishing edges. You should move the file from the outer decor edge to the centre of the panel. For broken edges, fine files, sand paper (100–150 grit) or scrapers can be used successfully. Cut edges should be finished by grinding the surface edge and sanding sharp edges with sandpaper.

Cut edge finishing with hand-held machines/tools
Hand-held overhead routers are used for the flush cutting of Max HPL panel edges. In order to retain the quality of the panel surface, any part which comes into contact with the surface of the handheld router, should be protected with off cuts. Shavings must be carefully removed.

We recommend hard metal-tipped routers, which are also available with indexable inserts. For the best working methods, height-adjustable routers are preferable.

Sharp edges have to be broken afterwards. The overhang of panels at gluing should not be larger then neccessary (≤ 5 mm) to avoid to much pressure to the machine at trimming.

Edge processing with stationary equipment
When milling glued Max HPL panels, the optimum ratio between the number of teeth, cutting speed and feed rate should be considered. If the shavings are too small, the machine will scrape (burn) and therefore blunt quickly, thus shortening its lifespan.

If, on the other hand, the shavings are too large, the edge becomes wavy (billowing) and untidy. High rotational speeds are not the only criterion for good edge quality!

For optimum edge quality of Aptico, always use tools with new or refurbished cutting blades.

Due to the high quality and special surface finish of Aptico, tools are likely to wear sooner, than when working with Max HPL panels.

Drilling

For drilling, solid carbide spiral or dowel drills should be used. The exit speed of the drill must be selected in such a way that the melamine surface of the Max HPL panel is not damaged. Shortly before the full-diameter of the drill protrudes through the workpiece, the feed rate should be reduced by approx 50%.

When drilling holes, care must be taken to ensure that sufficient counterpressure is applied. This can be done by using a hardwood or equivalent base or bed and this will prevent the melamine surface from breaking off.

Drills for plastics are best suited for Max HPL panels. These are spiral drills with a tip angle of ≤ 90°, a large gradient slope and flute. The sharp bits make them ideal for producing “drill holes”, as they cut cleanly through to the underside of the material.

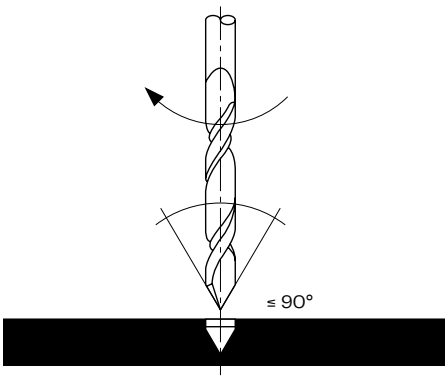

5 04

Tension-free

Screws must have enough clearance on all sides so that the material can adapt to temperature and humidity fluctuations. This will prevent the formation of cracks around the drill holes.

For HPL composite elements, countersunk head screws are not permitted. If countersunk screws are used, support rosettes (Fig. 5 05) are required.

Screws must always cover the drill hole (Fig. 5 06).

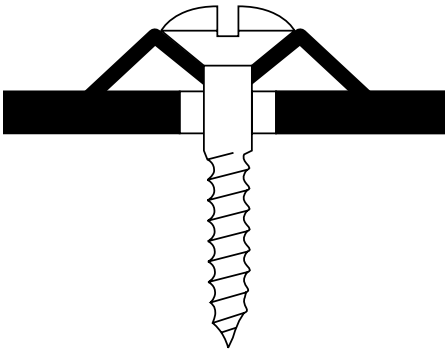

5 05

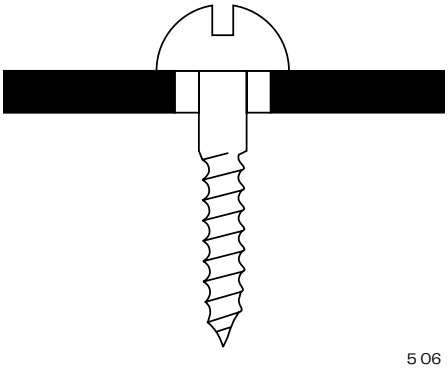

5 06

Milling

Inner recesses and cut-outs
For internal recesses and cut-outs, the corners must always be rounded off. The inner radius should be kept as large as possible (minimum radius 5 mm). For internal recesses and milling over 250 mm side length, the radius must be increased gradually according to the side length.

Internal recesses can be formed directly with the milling tool, or predrilled with a corresponding radius, before the recess is milled by moving from drill hole to drill hole. Sharp corners must be avoided as they can lead to cracks occuring due to tension in the panel. Furthermore, all edges must be free from notches. If, for design reasons, a sharp-edged inner corner is required, this will have to be formed by assembling fabricated and cut panels.

Tools suitable for the cutting, milling and drilling of inner recesses and cut-outs are described in the previous sections.

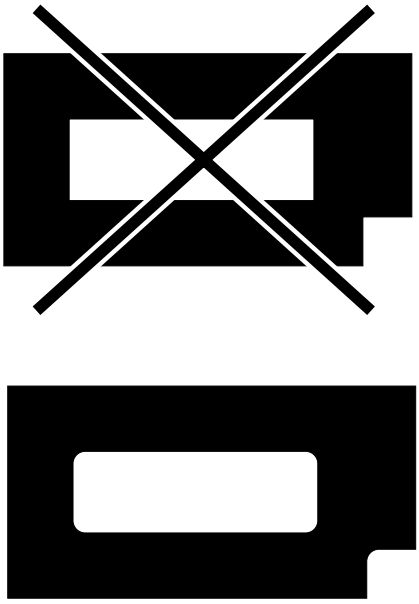

5 07

Material characteristics

- Due to the raw 'kraft paper' used to create Max HPL panels, the product has the same characteristics of both wood and paper products. These include swelling and shrinking both lengthwise and breadthwise.

- Therefore:
  If the same factors are taken into account when using and processing Max HPL panels, as with hardwood, there will generally be no problem.

Max HPL panels require a tensionfree flat supporting surface with minimal movement. This is an essential prerequisite for the stable application of the Max HPL panel to the substructure.

- Electing the appropriate adhesive, the right amount, the right pressure and temperature during the bonding process, all significantly influence the surface stability of the glued composite material. For high-gloss surfaces, the following parameters must be considered:
  a) smooth subsurface
  b) low water content in glue
  c) fast setting time

Due to their composition, Max HPL panels are subject to dimensional changes which differ from those of the sub-structure materials due to the influence of temperature and humidity. These different properties must be taken into account during processing.

Pre-conditioning

Because Max HPL panels and support panels/backing material may experience different dimensional changes, they should be conditioned together before processing – so that they can adjust their moisture content according to the environment. Materials that are processed damp or in wet conditions, can be prone to shrinking – leading to cracking and warping. Materials that are processed too dry, can later expand, potentially causing cracking or warping.

Effective **conditioning** can be achieved by ensuring a room temperature of around 15-25°C and relative humidity of 40-60%. Good air circulation around each individual panel is important. This process should take 1 week. Ideally, Max HPL and support panels should to be stacked in the same order in which they will be glued together. This process should take at least 3 days. The relative humidity during conditioning should be similar to the 'end' application environment.

Equalising Tension

Tension is always present between two mutually connected, different materials. Therefore, the subsrate must be covered on both sides with materials which are subject to the same dimensional changes when exposed to heat and moisture. This is especially true if the finished composite panel is intended to be cantilevered and is not held directly by a rigid construction, e.g. doors. The larger the areas to be surfaced, the more attention must be paid to the balancing panel and the density, symmetrical structure and stiffness of the assembled panels.

- The best results are obtained by using the same Max HPL panel on the front and back. Both must also have the same running direction when cut out from the entire panel and glued. Not right-angled!

- The Max HPL panels should be glued to the support simultaneously, from both sides, with the same running direction. Good results are also obtained by using so-called balancing panels of the same thickness. Care must be taken to ensure that both panels have been conditined in the same way.

- Under certain circumstances, it's feasible to use other backing materials, such as foils, wood veneers, lacquer coatings, impregnated papers, etc. However, it's always necessary to select a material whose physical properties are as close as possible to those of the Max HPL panel. Small tests should be carried out beforehand, but this is only useful for elements that are structurally fixed. It is difficult to predict the results from using such materials and therefore we cannot endorse them.

- In general, when gluing Max HPL panels, the following should be observed:
  - Same panel type (product) on both sides, as with veneering!
  - Same direction (cut) on both sides
  - Same panel thickness on both sides
  - Same conditioning procedure on both sides.

Support panels – e.g.:
- Chipboard
- MDF
- Hardboard
- Plywood

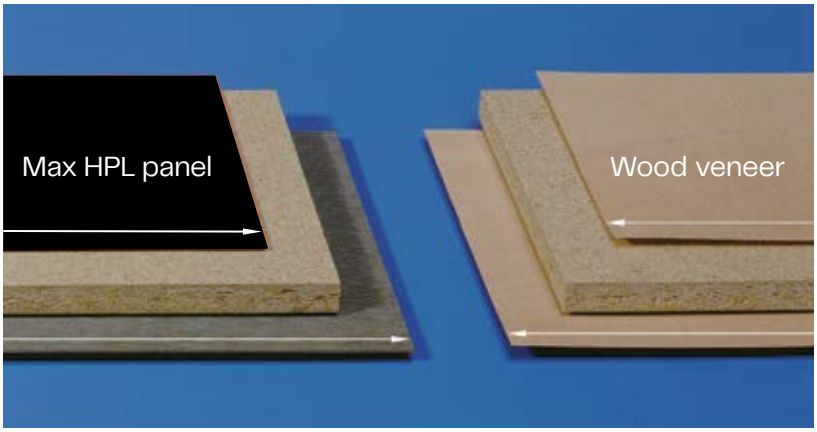

Panel type, running direction, panel thickness and conditioning grade 5 08

Gluing

Adhesives

- Dispersion adhesives
  e.g. PVA glues = white glues
- Condensation resin adhesives
  e.g. Urea, Resorcinol and Phenolic Resins
- Contact adhesives
  e.g. Polychloroprene adhesives
- Reactive adhesives
  e.g. Epoxy, Unsaturated Polyester, Polyurethane adhesives
- Hot-melt adhesives
  For edge gluing, based on EVA, polyamide or polyurethane.

Bonding process

Both Max HPL panels and support materials must be thoroughly cleaned before bonding. They must be free from dust, grease, oil, moisture, or coarse particles, which can mark the surface once bonded. During bonding the ambient temperature should be 15 – 25°C with a relative humidity of 40 – 60%.

When choosing the best joint adhesive, attention must be paid to the **adhesion quality** of the support material and the stresses it may be subjected to. A joint adhesive with increased water resistance does not increase the water resistance of the carrier/support material!

Please refer to the guidelines and recommendations provided by your adhesive manufacturer. It's always best to carry out **trial tests** under local conditions. When working with adhesives, solvents and hardeners, please observe relevant health and safety guidelines.

Press/Setting Temperature

To avoid tension between composite elements, a setting temperature of 20°C, i.e. room temperature, should be used. Higher temperatures naturally reduce the setting time. However, the dimensional changes of the Max HPL panel in relation to the support material needs to be considered, and a temperature of 60°C should not be exceeded. Following temperature guidelines will avoid increased tension and warping of the panels. For Max HPL panels supplied with protective film, a setting temperature of 20°C is recommended. A higher setting temperature (60°C in this case) may adversely affect the removal of the protective film.

Bending radii

For cold forming, the smallest possible bending radius for 0.8 mm thick sheets is 180–200 mm, and the smallest possible radius for 1 mm thick sheets is 250 mm.

Postforming

The recommended bending temperature is 160°C to 170°C. The smallest possible bending radii for postforming HPL is 10 times the panel thickness parallel to the sanding direction and 20 times the panel thickness transverse to the sanding direction.

6 Cleaning recommendations for Max HPL panels and Aptico

If stains are unknown, please begin the process with the basic cleaning procedure, A to G (in order) until successful. To prevent streaking, a final clean must be carried out.

Basic cleaning
Please clean the surface using just pure hot water and a soft sponge – (Do not use the abrasive „green“ side of the sponge), use a soft cloth or a soft brush (e.g. nylon brush).

Cleaning procedure A
Same as the basic clean. In addition, use everyday household cleaning agents without abrasive ingredients such as washing liquid (Palmolive, Fairy etc), or glass cleaner (Mr. Muscle, Windolene, etc).

Cleaning procedure B
If the contamination cannot be removed using cleaning procedure A, use a soap-water solution (1:3). Depending on the degree of contamination, the soap-water may need to soak in for a period of time.

Cleaning procedure C
Same as basic cleaning, however, organic solvents (for example, acetone, alcohol, nitro thinner, turpentine) may also be used. Heavier soiling should be removed manually – but not in the case of high gloss or deep matt finishes. Caution: Avoid scratching - use a plastic or wooded spatula.

Cleaning procedure D
Same as basic cleaning but additionally you can use commercially available disinfectants. Steam cleaning is possible. Take care not to wet the supporting material (for example in the case of wood-based materials, wall cladding, insulation etc.).

Cleaning procedure E
Remove immediately! If necessary, perform cleaning procedure C again and don’t forget the final cleaning process.

Cleaning procedure F
Rub the surface dry with a soft cloth or a soft sponge. If contaminants can’t be removed, use a silicone remover (e.g. Molto).

Cleaning procedure G
For extremely adherent lime contaminants, acidic cleaning agents (e.g., 10% acetic acid or citric acid) can also be used.

Final cleaning
Rinse off detergents thoroughly with plenty of water to avoid streaks. Finally, rinse with pure hot water and dry by wiping the surface with an absorbent cloth or paper towel (kitchen roll). When cleaning with solvent: Observe accident prevention regulations! Open windows! No open flame!

General precautions

For best cleaning results, observe the following precautions:

- For Aptico surfaces, we recommend cleaning method B to remove grease residues.
- Never treat MAX HPL surfaces with products that contain abrasives. Do not use scouring pads (green scouring fibers), sandpaper, or scouring pads.
- For real metal surfaces, cleaning procedures A and B can be used for most stains. In stubborn cases, alcohols can be used. The use of acetone is not recommended.
- Despite the good durability, we recommend that when using marking materials (e.g., chalk or whiteboard markers), you check in advance whether they can be removed without leaving residue.
- Avoid highly acidic or alkaline products as they can alter the surface structure.
- When using solvents, the cloth used must always be clean to prevent streaking.
- To protect the surface properties, do not use polishes or wax-based products.
- Final cleaning with hot water is generally always recommended.

Type of stain	Cleaning procedure
Adhesives	C
Bacteriological Contamination	D
Blood	D
Chalk	A
Coffee	A
Dispersible (Pva)	C
Dust	A
Emulsion Paints	C
Excrement	D
Fat, Oil	A, B, C
Felt Tip Pen	C
Fingerprints	A
Floor Polish	B
Fruit Juices	A
Germs	D

Type of stain	Cleaning procedure
Grease/Fat	A
Hybrid Adhesive	E
Insulating Foam	E
Lime Scale	G
Lipstick	C
Marker Pen	C
Mordant/Stain	C
Paints (Graffiti)	C
Pen	C
Pencil	A
Pu-Foam	E
Rust	G
Sealant (Silicone etc)	F
Shoe Cream	C
Soap	A

Type of stain	Cleaning procedure
Spray Paint	C
Stamping Ink	C
Synthetic Resin	E
Tar (Cigarettes)	C
Tea	A
Two Component Adhesive	E
Two Component Lacquer	E
Urea-Based Glue	E
Urine	D
Water Marks	G
Water Soluble Adhesives	A
Water Soluble Paints	A
Wax Crayon	C
Wax Polish	C
Wax Residue	C

Please note that some adhesives can only be removed once hardened.
(However there is danger of damaging the Max HPL surface!).

7 Max HPL panel with Aptico surface

Reveal Aptico

Max HPL panel with Aptico surface is an innovative product for interior design. Thanks to our next generation, patented surface technology, it delivers high-end aesthetics for high-end demands. The surface has unique features such as: low light reflection due to an extremely matt finish, a great texture, and anti-fingerprint properties. A further positive feature is the possibility of thermal repairs of any superficial microscratches.

The surface provides a high degree of resistance to scratches and abrasion, with optimum stain and chemical resistant properties thanks to its unique protective technology.

Application Areas for Aptico
Thanks to its special features, Aptico is suitable for both horizontal and vertical applications. It can be used in a wide range of interior designs, both for home and commercial sector applications: e.g. kitchens and bathrooms, work surfaces, furniture construction, doors and wall claddings. The Aptico surface is direction-oriented. Please note this when processing.

The physical qualities of the surface offer exceptional performance, making this material a great alternative to solid surfaces or glass, with the added advantage of simple processing.

In normal environments with approximately 15-25°C and 40-60% relative humidity, a standard HPL with the same decor can be used as a backing panel.

Areas with more demanding conditions such as a very high or very low humidity, e.g. wet rooms or heavily air-conditioned rooms, require symmetrical assembly. Aptico must be selected for both sides.

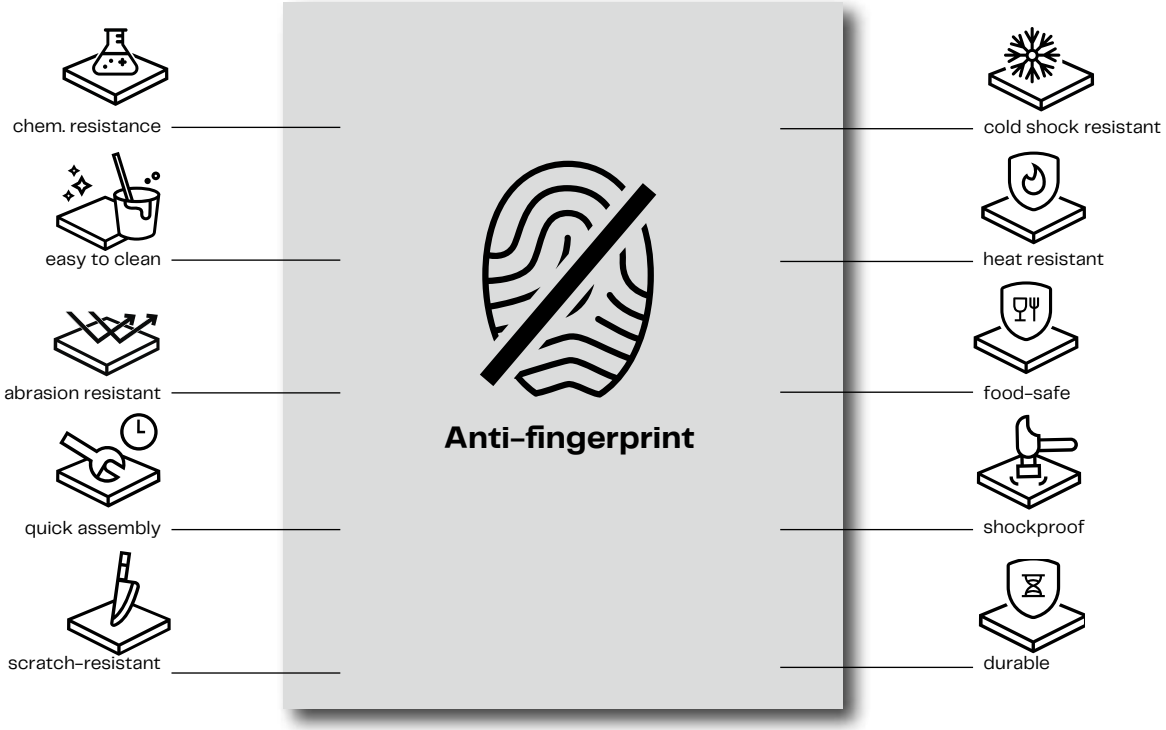

Advantages of Aptico

- Anti-fingerprint
- Gentle light reflection thanks to an extremely matt surface
- Matt finish with a warm texture
- Resistant to scratches and abrasions
- Resistant to solvents and household cleaners
- Easy to maintain and very easy to process

Thermal repair of micro-scratches in solid colors

Iron repair

One of the most innovative features of Aptico is the possibiliy of thermal repair to superficial microscratches (Fig. 7 01). The following repair instructions are suitable for HPL and Compact panels with the Aptico surface.

- Moisten/wet some kitchen paper using pure water from a spray bottle and position it on top of the damaged area. (Fig. 7 02).
- Heat an iron to about 180°C, and then move this across the wet kitchen paper in a circular motion for max. 10 seconds (Fig. 7 03).
- Dry the surface with a clean, dry cloth (Fig. 7 04 and Fig. 7 05).

Note: It is recommended to repair micro-scratches within 48 hours.

7 03

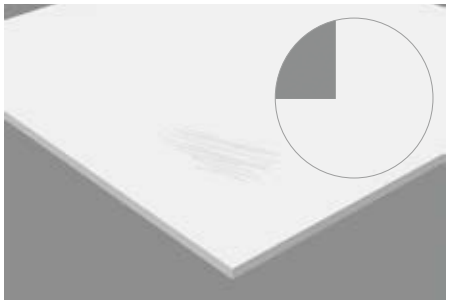

7 01

7 04

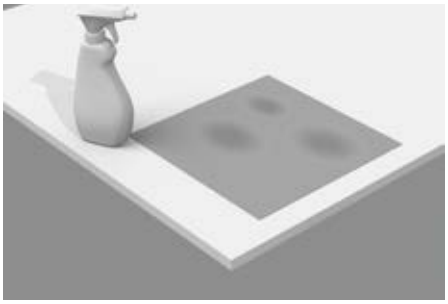

7 02

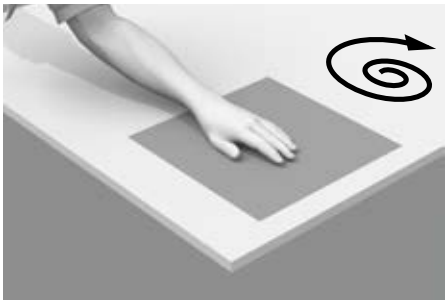

7 05

Liability Disclaimer

The information provided in this document is for general reference purposes only. Not all systems named and illustrated are suitable for all applications/areas. All customers and third parties are obliged to inform themselves about Fundermax products as well as their suitability for specific purposes. We strongly recommend that anyone using our products seeks independent expert advice regarding compliance, local planning and application requirements, applicable laws, regulations, guidelines and test standards. Fundermax accepts no liability in connection with the use of this document.

Responsibility for correct and appropriate planning and execution lies solely with the planner and the processor. The general terms and conditions of the sale of Fundermax GmbH products can be found on our website www.fundermax.com. These apply to all our oral, as well as written comments, offers, quotations, sales, deliveries and/or contracts and related activities.

Copyright

All text, photographs, graphics, audio and video files are protected by copyright laws, as well as intellectual property laws, and may not be duplicated, altered or used on other websites for commercial or financial gains.

Fundermax Deutschland GmbH
Mundenheimer Weg 2
D-67117 Limburgerhof
infogermany@fundermax.biz
www.fundermax.com

Fundermax France S.a.r.l.
29 Rue Maurice Flandin
F-69003 Lyon
accueil@fundermax.biz
www.fundermax.com

Fundermax India Pvt. Ltd.
Sy. No. 7, Honnenahalli, Doddballapur Road,
IND-Yelahanka Hobli, Bangalore - 560064
officeindia@fundermax.biz
www.fundermax.in

Fundermax Italia s.r.l.
Viale Venezia 22
I-33052 Cervignano del Friuli
infoitaly@fundermax.biz
www.fundermax.com

Fundermax North America, Inc.
9800 Twin Lakes Parkway, Suite B,
US-Charlotte, North Carolina 28269
contactfna@fundermax.biz
www.fundermax.us

Fundermax Polska Sp. z o.o.
ul. Rybitwy 12
PL-30 722 Kraków
T: +48 (0)12 65 34 528
infopoland@fundermax.biz

Fundermax Swiss AG
Industriestrasse 38
CH-5314 Kleindöttingen
T: +41 (0)56 268 83 11
infoswiss@fundermax.biz
www.fundermax.com

09/26-PR.010.EN.WEB

Fundermax GmbH
Klagenfurter Straße 87-89, A-9300 St. Veit/Glan
T: +43 (0)5 9494-0, F: +43 (0)5 9494-4200
office@fundermax.at
www.fundermax.com

MEMBER OF Constantia INDUSTRIES